Patio Deck Construction
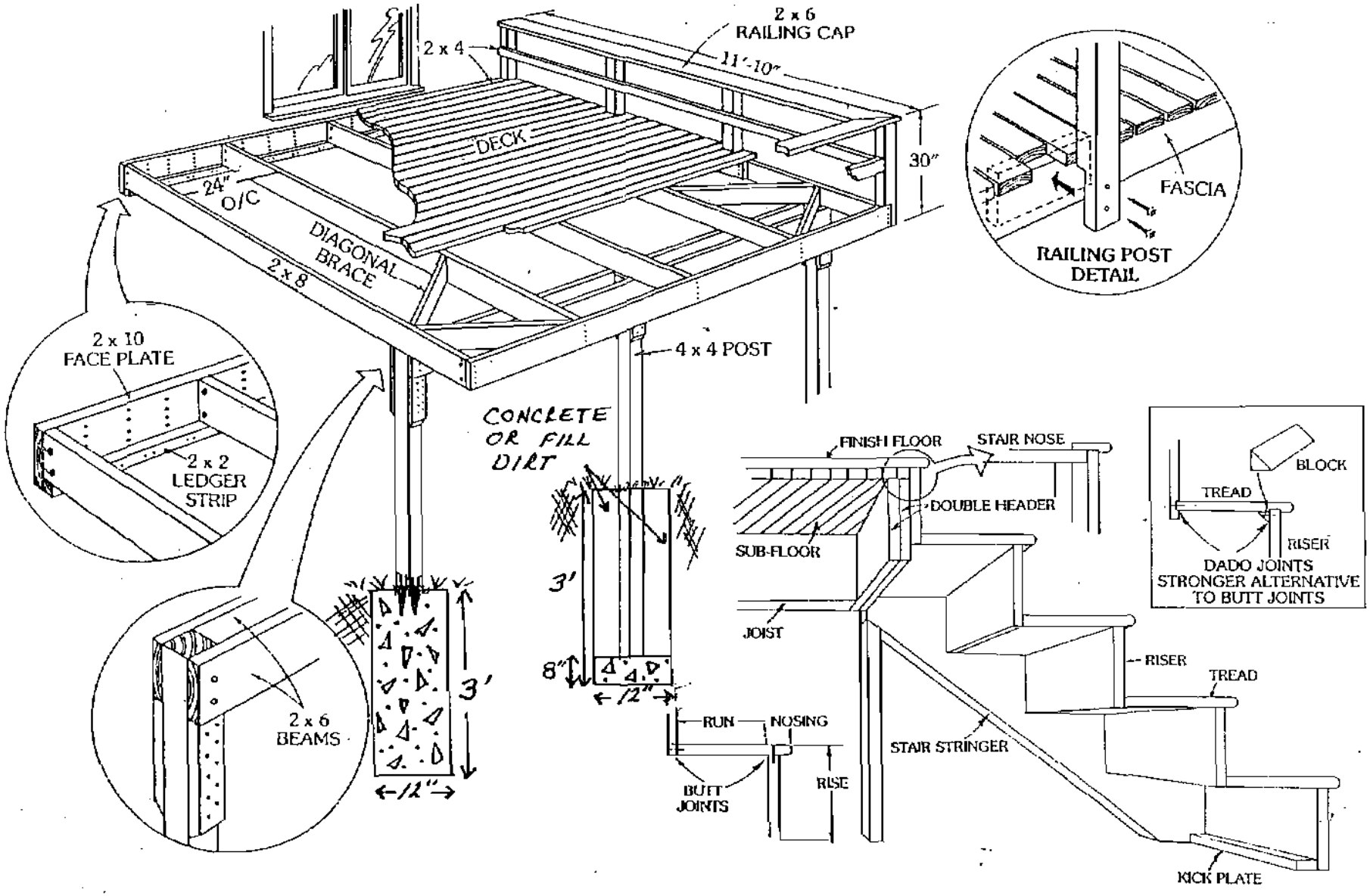
***IF DECK IS 30" OR MORE ABOVE FLOOR OR GRADE IT IS <u>REQUIRED</u> TO HAVE GUARDRAILS 36" HIGH. SPINDLES MUST BE ON 4" CENTERS.**